(Note 1) Appearance Coating Industry Association UN-60 (Munsell N-6 equivalent)

(2) Open/close indication

Blue indication when valve is open: indicated by blue reset button on transparent display cap

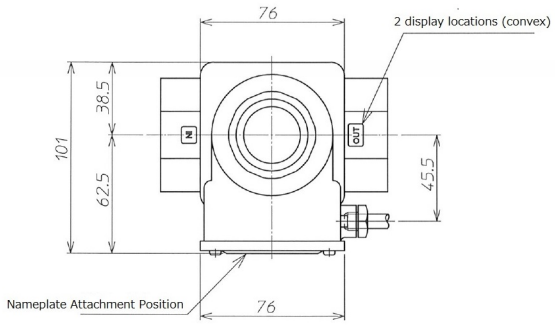

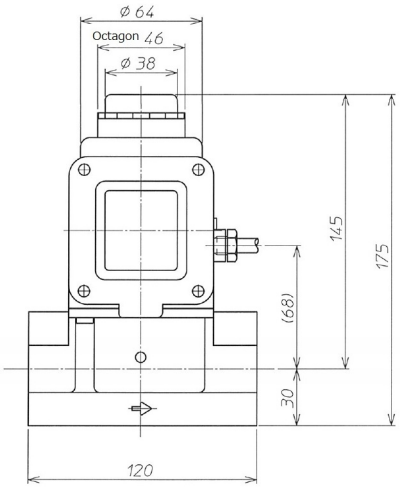

Wiring diagram

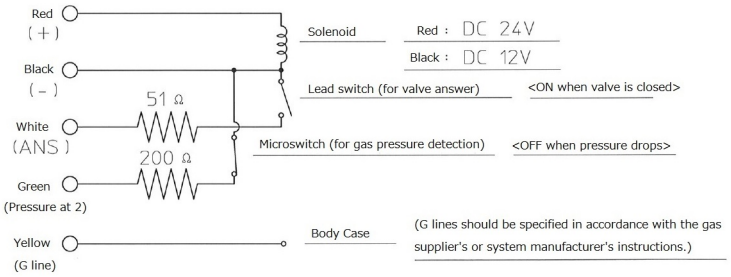

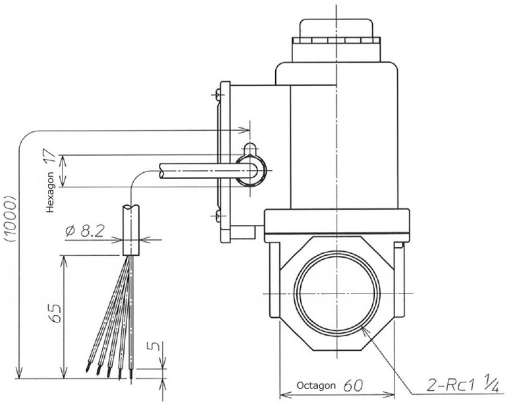

Model : KCV-2-32P

MARK	COUNT	DATE	REVISION	MATERIAL	REMARK
3		. .			For LP gas
2		. .			
1	1	12 . 4 . 1	Figure Frame Change	PROJECTION / SCALE N/A	NAME: OUTLINE VIEW AND SPECIFICATION
APPROVED: Okuno	CHECKED: Tadokoro	DRAWN: Ogyu	DATE: 1999.3.19	Azbil Kimmon Co.,Ltd. JAPAN	DRAWING No. Z-KCV232P-A000A